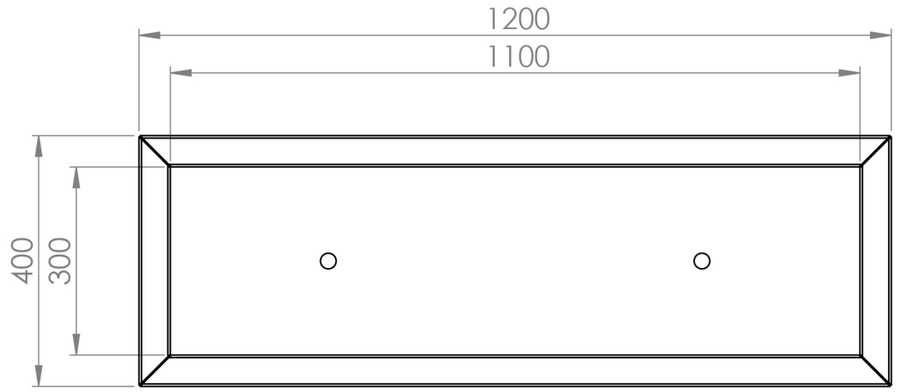

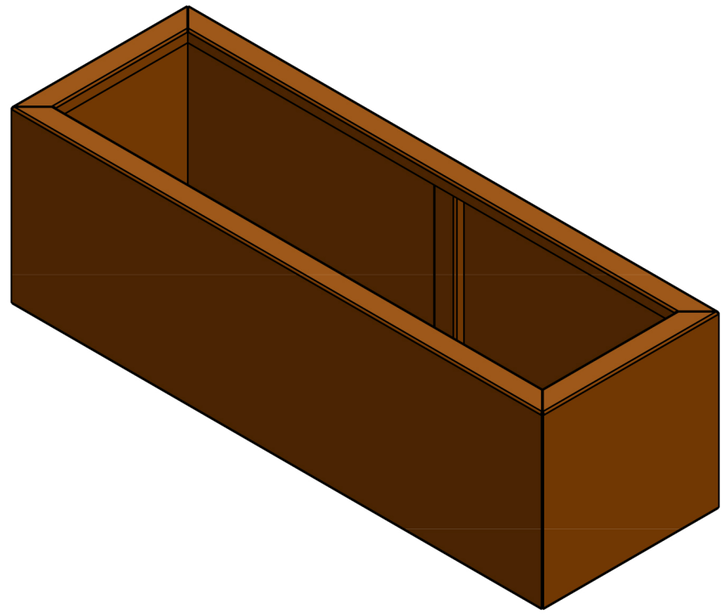

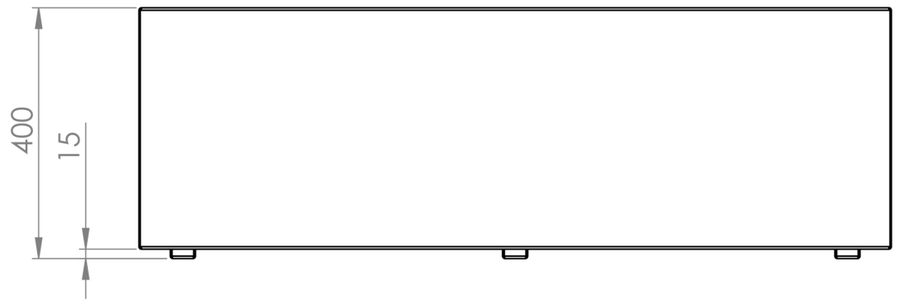

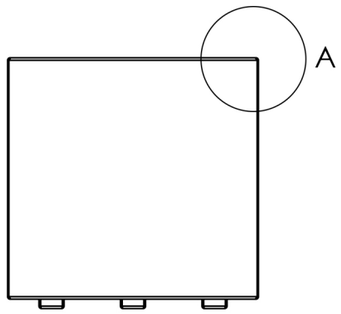

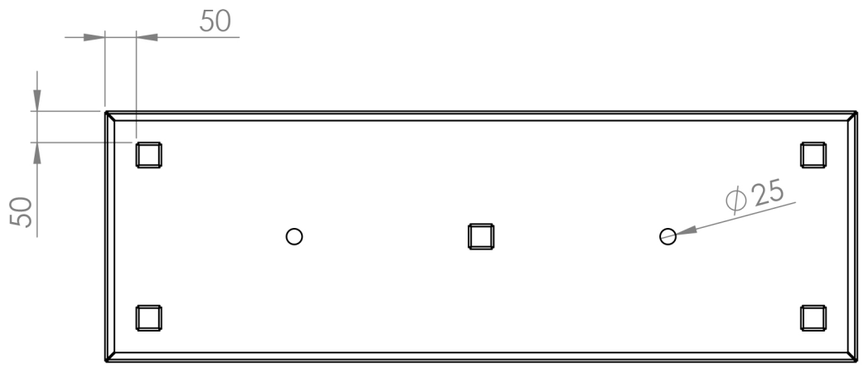

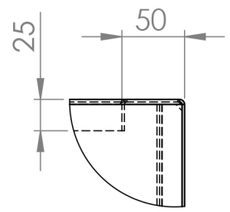

DETAIL A
SCALE 1 : 5

		DATE
DRAWN	Joris Koppens	4-10-2019
REVISION		

TITLE:

2 mm Corten

Drawing.

CA25.2

A3

Color:

Mass (kg): **31.33**

SCALE:1:10

SHEET 1 OF 7