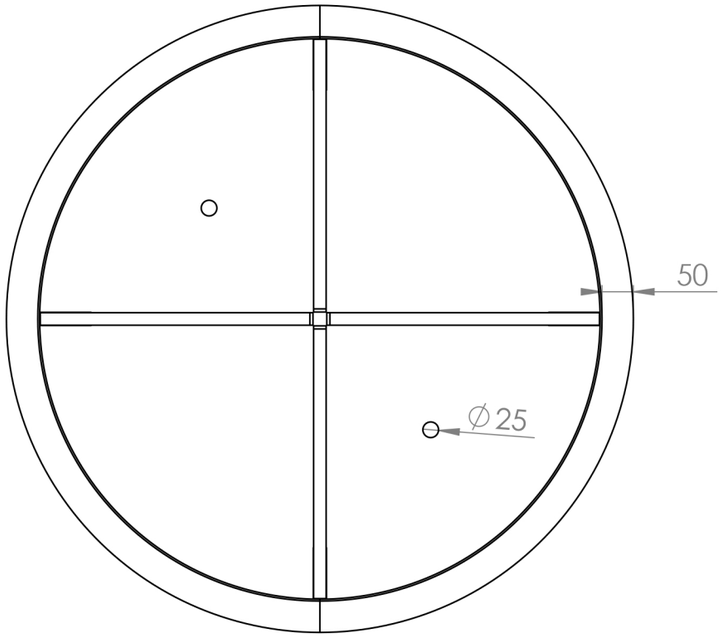

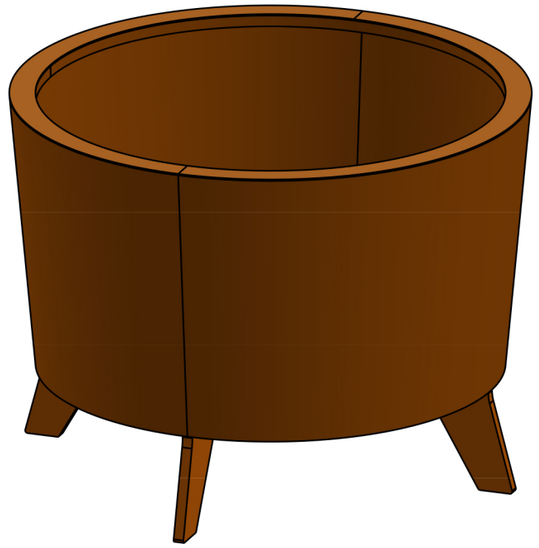

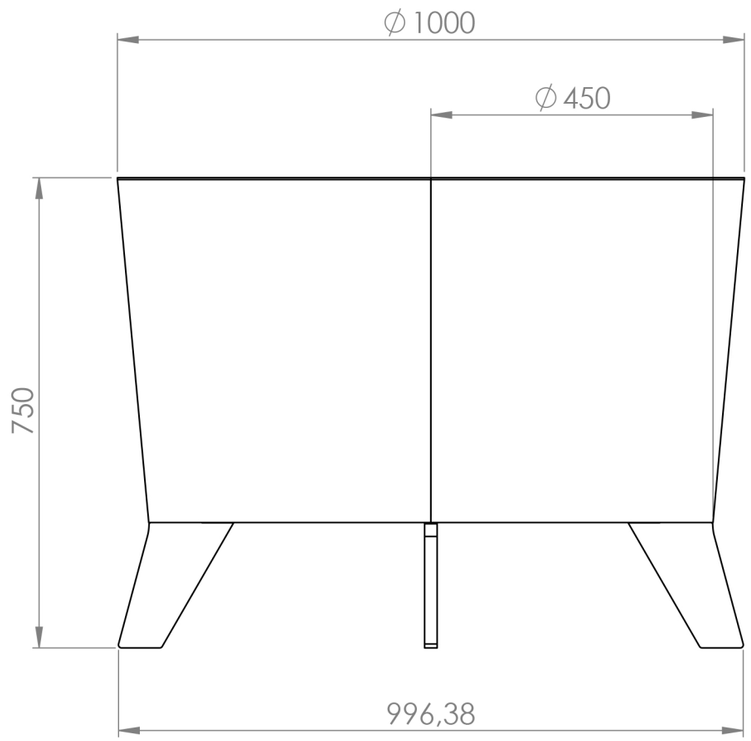

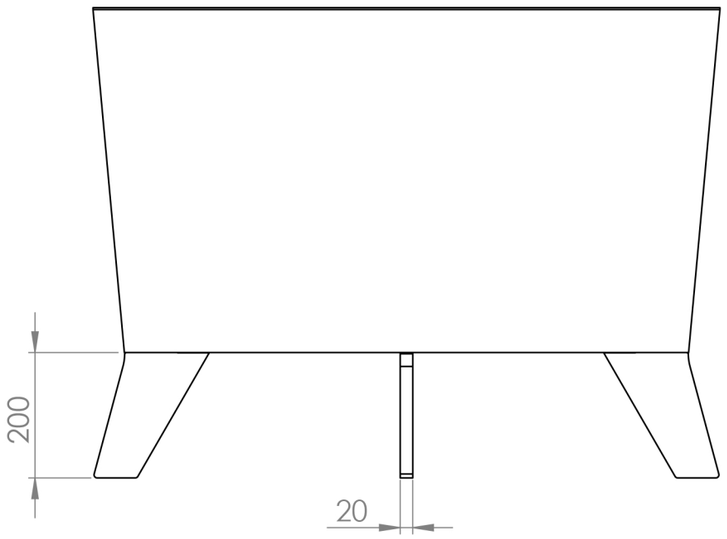

		DATE
DRAWN	Luuk van den Heuvel	
REVISION		

TITLE:

3mm Corten

Drawing.

DUB-CDB1

A3

Color: -

Mass (kg): **78.54**

SCALE:1:12

SHEET 1 OF 7